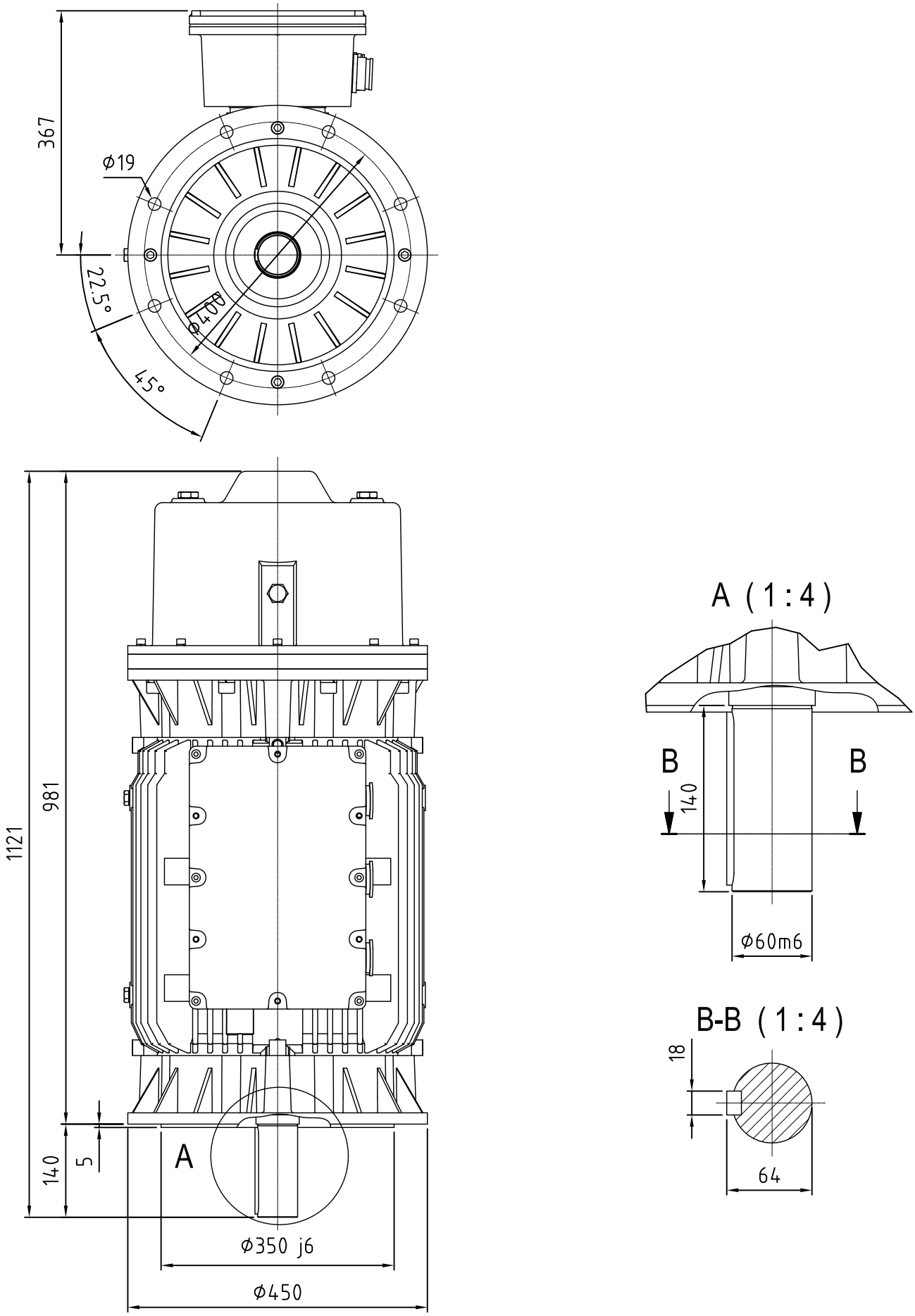

	DESCRIPTION
obeki	MARINE MOTOR T225M IC410, B5 (4-12 Poles)