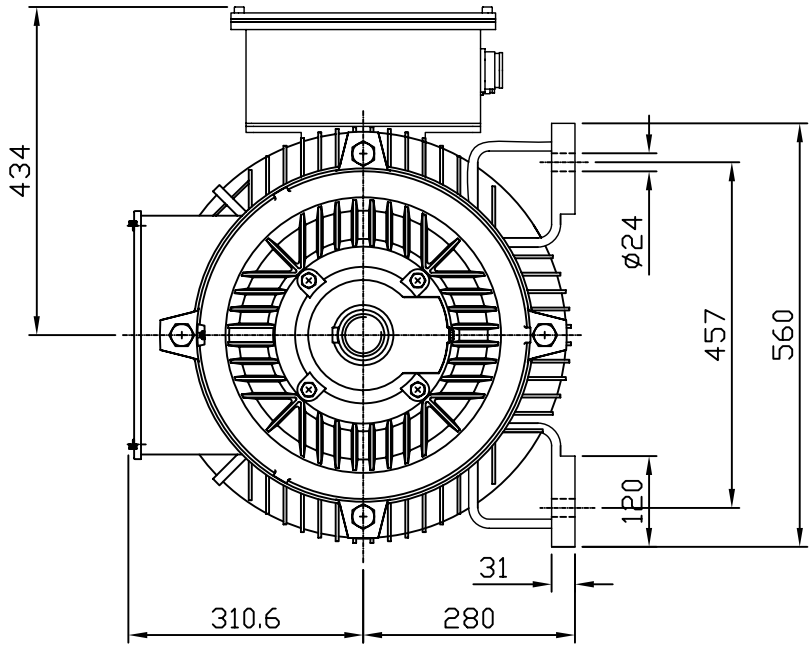

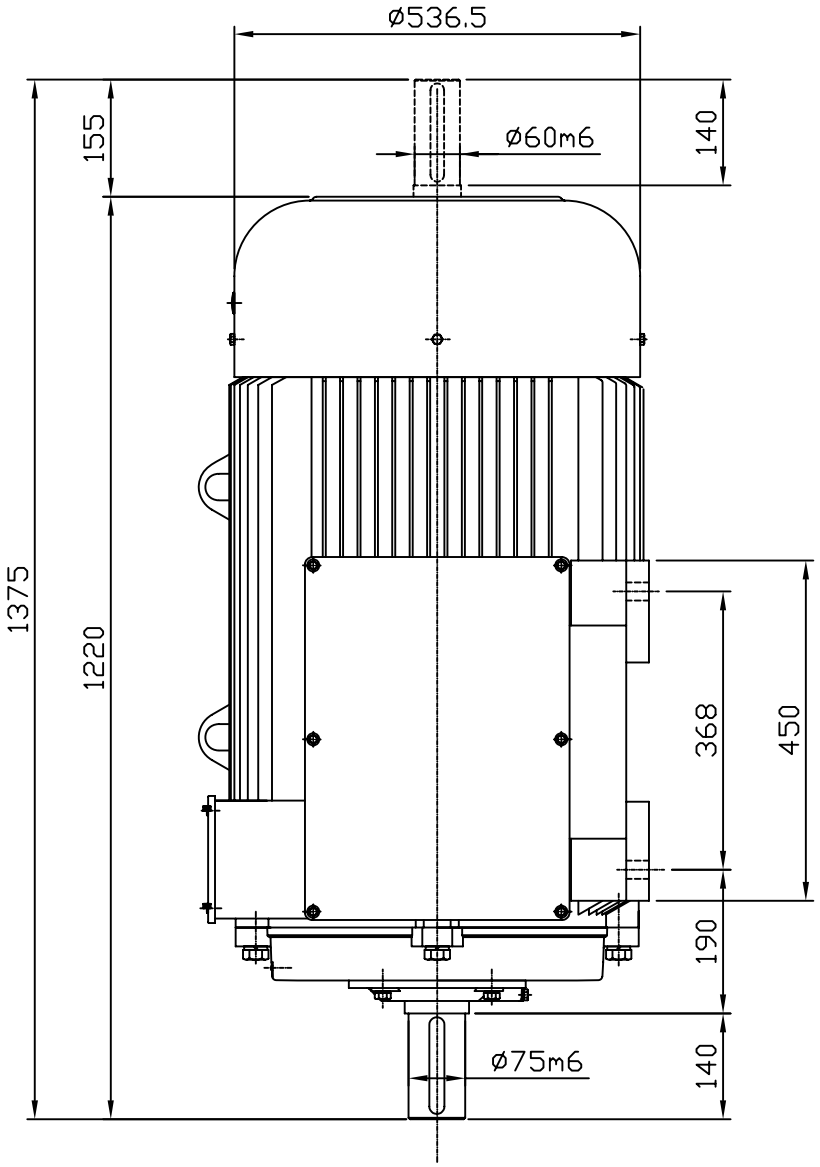

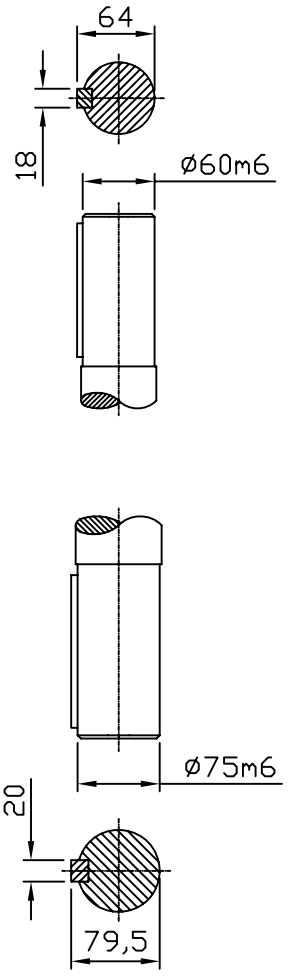

	DESCRIPTION
obeki	SLIP RING MOTOR T280S, 4-12P, B3